Designer Deck Inc.
101 PLANCHET RD. UNIT #6-7
CONCORD, ON. L4K 2C6

Porsets1/ Elevated Porcelain Tile Support System [Product Data Sheet]

Updated: Feb 26/2026

Add value, function, and elegance with a premium finish engineered to be economical

Introducing a revolutionary one-of-a-kind structural support system, designed to support porcelain tiles for both exterior and interior flooring applications. Innovation begins with smart intuitive products like Designer Deck's *Porsets* substructure framework; engineered in direct response to a rapidly immerging material in popular demand. Porcelain offers unmatched aesthetic versatility and considerable savings which has been captured mindfully in this unique new product designed to meet the primary criteria that that high- and low-rise projects require of a well-suited solution.

Designer Deck Inc.
101 PLANCHET RD. UNIT #6-7
CONCORD, ON. L4K 2C6

Porsets1/ Elevated Porcelain Tile Support System [Product Data Sheet]

Updated: Feb 26/2026

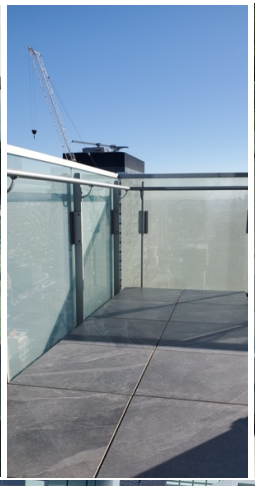
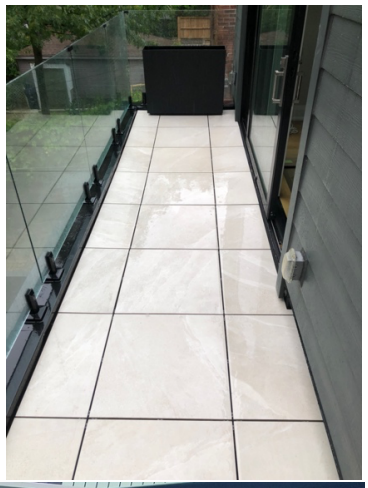
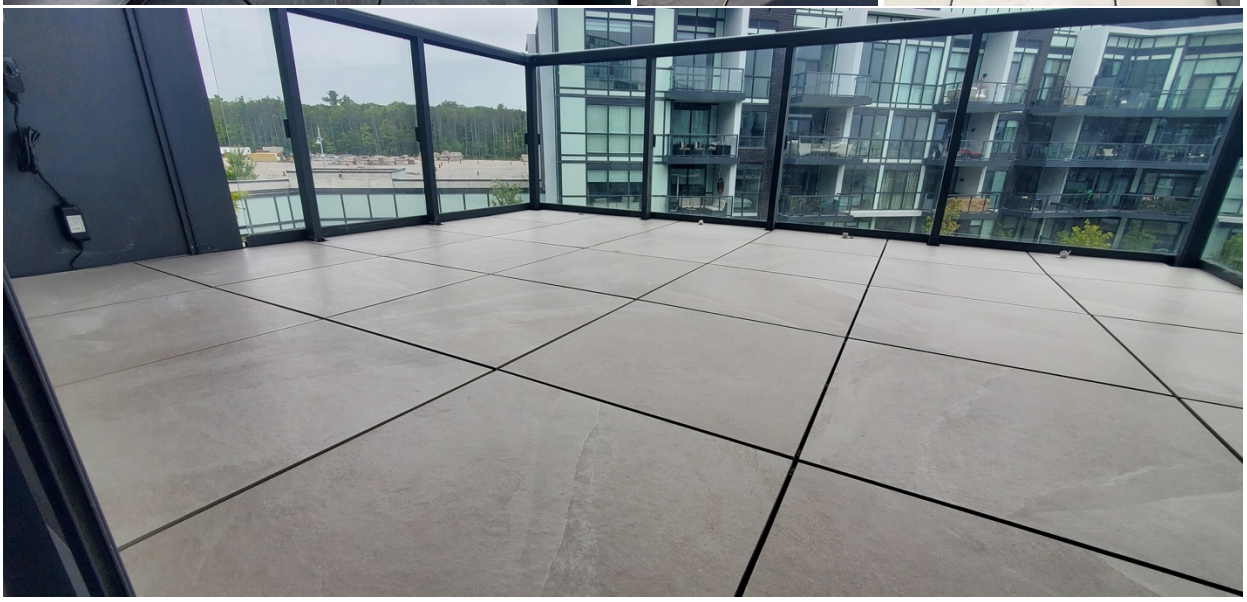

Applications

Porsets are ideally suited for a variety of applications. More specifically, they've been designed and tested to perform on concrete surfaces typically found on condominium balconies, torch-down 2-ply weatherproofing for flat roof terraces, or compacted surfaces such as limestone used for landscaping.

Designer Deck Inc.
101 PLANCHET RD. UNIT #6-7
CONCORD, ON. L4K 2C6

Porsets1/ Elevated Porcelain Tile Support System [Product Data Sheet]

Updated: Feb 26/2026

Installation System

Porsets have been engineered to hold a 3/8"/9.525mm (R9/R10) premium porcelain tile, as opposed to the industry standard thickness of ¾" / 19mm typically used for outdoor projects. This reduction in size equals lower materials costs-and labor, in addition to stronger static weight loads compared to conventional products. With all these incredible benefits and dynamic features, porcelain pavers are far more attainable as a viable option for exterior applications.

All Designer Deck flooring systems and parts are non-structural assemblies and shall not be used to support or anchor railings, guardrails, handrails, fixed umbrellas, pergolas, privacy screens, or other permanent components; all associated loads must be independently transferred to a suitably engineered structural substrate. The installer/contractor is solely responsible for the design, installation, anchorage, structural adequacy, and code/by-law compliance of such components. Any third-party penetration, attachment, alteration, or modification of the flooring system voids the applicable Designer Deck product and workmanship warranty, and Designer Deck assumes no liability for resulting deficiencies, failures, damage, or claims, except where caused by Designer Deck's negligence.

Designer Deck Inc.
101 PLANCHET RD. UNIT #6-7
CONCORD, ON. L4K 2C6

Porsets1/ Elevated Porcelain Tile Support System [Product Data Sheet]

Updated: Feb 26/2026

Product Features

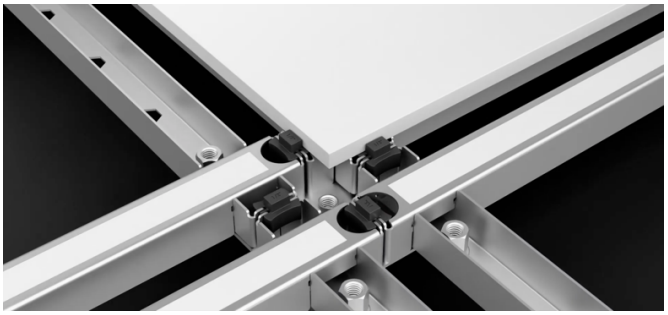

(Fig.1) Porcelain tile on framework

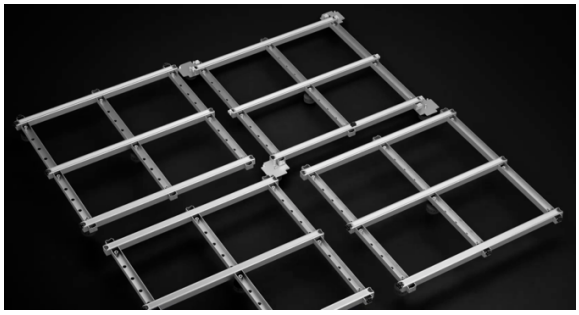

(Fig. 2) Framework- sections coming together

(Fig. 3a) Micro-Adjustable Feet

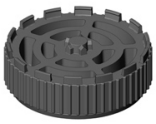

(Fig. 3b) Custom Shoe Attachments

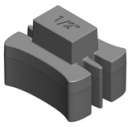

(Fig. 4) Shock Absorption Spacer.

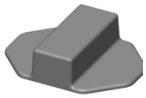

(Fig. 5) Silicone Spacer

Porsets provides unmatched durability with its proprietary substructure metal framework (Fig.2), designed to comfortably support a much thinner tile. As such, tiling can be handled easier and applied directly on top of this custom levelled foundation (Fig.1). Using the two (9) built-in-adjustable height pedestal feet, the installer is capable of manipulating the framework with up too 5/8″ in micro adjustments for maximum control over levelling the surface (Fig.3a). Additional ¼- ½ custom shoe attachments (not included) can be securely snapped on to the base of the pedestal feet in multiple increments, to assist with increasing height where required and in order to account for variance in foundation slope (Fig.3b). Each frame is connected to one another using our innovative plastic shock absorption spacers (Fig.4); they are designed to evenly space the surface tiles and allow for variance in brand dimensions. They also mitigate sound, by eliminating direct contact between the metal substructure. Additional silicone spacers (Fig.5) can be further incorporated to sit on the metal rails and accommodate for even spacing when working with dimensions such as 48″x 8″ or 24″x 12″ wood-look porcelain planks or other styles.

Designer Deck Inc.
101 PLANCHET RD. UNIT #6-7
CONCORD, ON. L4K 2C6

Porsets1/ Elevated Porcelain Tile Support System [Product Data Sheet]

Updated: Feb 26/2026

Product Features

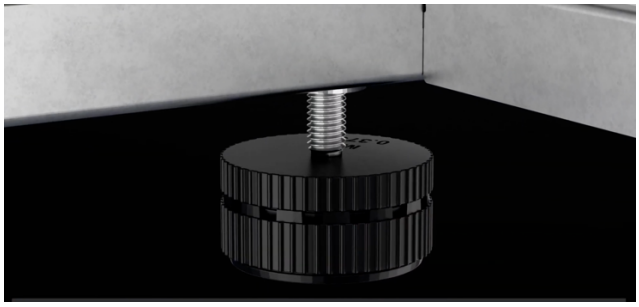

(Fig. 6a) Prefabricated hex cut-outs

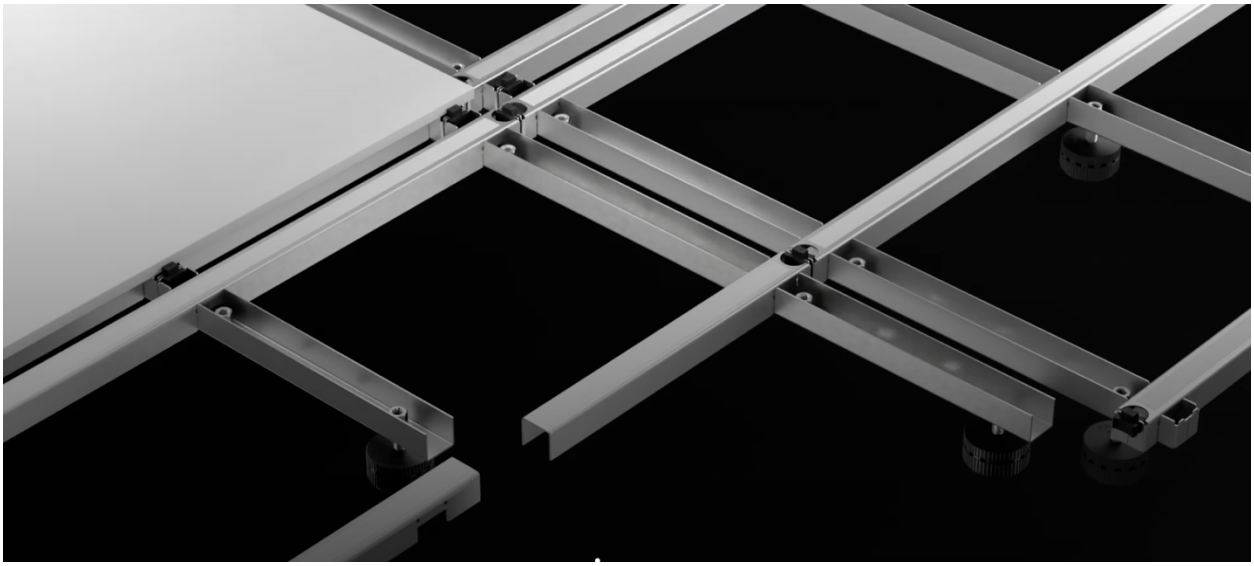

(Fig. 6b)

The metal framework can then easily be cut to fit any area's shape by severing the material with an angle grinder (Fig.6b). Using prefabricated hex cut outs along the rails (Fig.6a) the installer can relocate the adjustable foot by simply inserting and crimping (using an air rivet gun) an M8 nut into the closest hole for supporting the frame. Once fitted, porcelains can be cut to size and laid directly on of the frame top with the corresponding spacers.

Designer Deck Inc.
101 PLANCHET RD. UNIT #6-7
CONCORD, ON. L4K 2C6

Porsets1/ Elevated Porcelain Tile Support System [Product Data Sheet]

Updated: Feb 26/2026

Product Features

- True floating system – allows for ease of access underneath the elevated system for the ability to run small wiring (i.e. for system pot lighting), piping or irrigation lines etc. Adhesives or screws are not required to secure system to the receiving surface.
- Substructure metal framework comes equipped with custom feet for micro height adjustment when levelling and with optional clip-on shoe pads to account for extreme variance in slope and where additional height may be required.
- Low-profile design complies with building height restrictions and codes requirements.
- Durable and capable of absorbing static weight loads up to (400 lbs. / 181 kg) using a slimmer and more cost effective 3/8″ tile compared to that of a conventional 3/4″ paver, typically used for exterior applications such as patios, balconies and roof terraces installations.
- Lightweight frame/tile = results in a system that is easier to use, more cost-effective logistics (shipping), and labour friendly (lightweight and ergonomic).
- Designed to work with variation in tile lines including multiple and popular formats such as 12″x 24″, 24″x 24″, 48″x 8″, 36″x 36″ and more.
- Porcelain surfaces keep solar absorption down on exposed sunlit areas = resulting in home energy savings with A/C cooling (low SRI values).
- Porcelain is a luxurious emerging industry solution, that offers respectable environmental sustainability and performance qualities. They are non-porous, resist spills, stains and do not require sealing. An advantage over concrete pavers which is porous and requires regular sealing to prevent staining and damage over time.
- Many exterior porcelains come with slip-resistant surface textures and tested frost ratings making them ideal for outdoor use and capable of withstanding the harsh Canadian winter climates.
- Product warranty ensures no defects in materials and workmanship and does cover damage resulting from misuse, or modification to the system post qualified installation.
- Material Safety Data Sheets (MSDS) are available for each component of the Porsets Elevated System

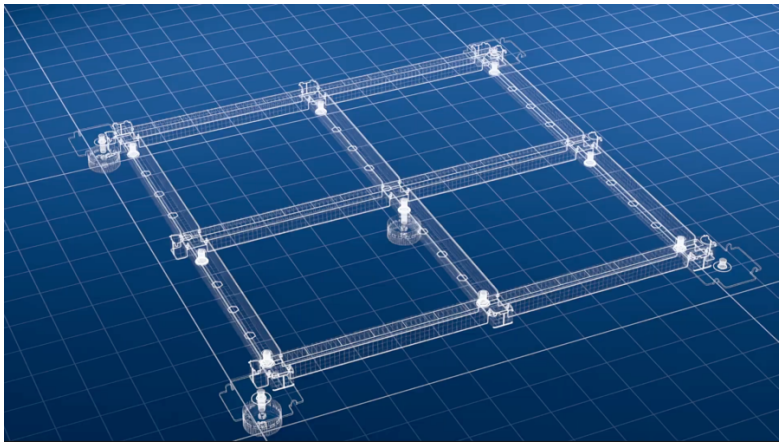

Designer Deck Inc.
101 PLANCHET RD. UNIT #6-7
CONCORD, ON. L4K 2C6

Porsets1/ Elevated Porcelain Tile Support System [Product Data Sheet]

Updated: Feb 26/2026

Variation

Porsets is power packed with the ability to diversify aesthetic vision, offering the designer, architect and installer seamless access to a variety of sizing formats in captivating finishes rated for exterior and interior applications. Using Designer Deck's custom silicone spacers, porcelain tiles can sit freely on the rails in any position, allowing for outcomes using popular industry tile size formats such as 48"x 8, 12"x 24", 24"x 24" and many more. These spacers simply cushion the tiles and mitigates movement, creating perfect spacing for the sizes of choice. The end result allows for the design and installation of a multitude of modern and contemporary colours and patterns.

Lithium

Slate

Tektonic

Alabaster

Designer Deck Inc.
101 PLANCHET RD. UNIT #6-7
CONCORD, ON. L4K 2C6

Porsets1/ Elevated Porcelain Tile Support System [Product Data Sheet]

Updated: Feb 26/2026

Porcelain Tile

Technical Information

WATER ABSORBTION	ANSI / ISO – (%)	<0.5%
ABRASION RESISTANCE	ANSI / ISO	CLASS 4
SCRATCH HARDINESS	ANSI / ISO – (Mohs)	7
BREAKING STRENGTH	ANSI (lbf) / ISO – (N)	≥300 / ≥1700
SHADE VARIATION		V3
SLIP RESISTANCE	ANSI – DCOF (WET) ISO – R VALUE	MATT≥0.55 (ID,IW,IW+EW*,O/G*)
CHEMICAL RESISTANCE	ANSI / ISO	CLASS A
STAIN RESISTANCE	ANSI / ISO	CLASS A / CLASS 5
FROST RESISTANCE	ANSI / ISO	PASS

* Depending on the tile line of choice, specifications may vary from the product referenced above. When applying the Porsets substructure metal framework to exterior applications, R10/R11 rated porcelain tiles must be used on top of the substructure only, with careful attention to critical factors such as frost/ slip resistance and break strength. This framework is capable of accommodating a 3/8" thick tile.

Designer Deck Inc.
101 PLANCHET RD. UNIT #6-7
CONCORD, ON. L4K 2C6

Porsets1/ Elevated Porcelain Tile Support System [Product Data Sheet]

Updated: Feb 26/2026

Technical Information & Testing

Substructure Metal Framework

INSPECTION CERTIFICATE

PRODUCT	CRS1010		
SPECIFICATION	GB/T 2518-2019		
CERTIFICATE NO.	DG-DX-24-11-0038		

NO.	COIL NO.	GRADE	MATERIAL DESCRIPTION				CHEMICAL COMPOSITION %							TENSILE TEST			COATING MASS	ZINC LAYER ADHESION	SURFACE QUALITY	SURFACE TREATMENT
			THICK	WIDTH	LENGTH	MASS	C	Mn	S	P	Si	Cr		ReL	Rm	A 80mm				
			mm	mm	m	t								MPa	MPa	%	g/㎡			
1	D2Z224101715003	DX51D+Z	1.20	1250	C	7.105	0.09	0.43	0.018	0.024	0.20	0.18		235	360	32.0	Z40	Qualified	FB	Environmental passivation
2	D2Z224101715002	DX51D+Z	1.20	1250	C	7.125	0.09	0.43	0.018	0.024	0.20	0.18		230	355	32.0	Z40	Qualified	FB	Environmental passivation
3	D2Z224101715001	DX51D+Z	1.20	1250	C	7.115	0.09	0.43	0.018	0.024	0.20	0.18		235	360	32.0	Z40	Qualified	FB	Environmental passivation
4	D2Z224101810403	DX51D+Z	1.20	1250	C	7.105	0.09	0.43	0.013	0.012	0.20	0.18		232	360	32.0	Z40	Qualified	FB	Environmental passivation
5	D2Z224101810402	DX51D+Z	1.20	1250	C	7.105	0.09	0.43	0.013	0.012	0.20	0.16		230	339	32.0	Z40	Qualified	FB	Environmental passivation
6	D2Z224101810401	DX51D+Z	1.20	1250	C	7.255	0.09	0.43	0.013	0.012	0.20	0.16		225	345	32.0	Z40	Qualified	FB	Environmental passivation
7	D2Z224101810703	DX51D+Z	1.20	1250	C	7.265	0.01	0.41	0.016	0.019	0.20	0.16		237	361	32.0	Z40	Qualified	FB	Environmental passivation
8	D2Z224101810702	DX51D+Z	1.20	1250	C	7.065	0.01	0.12	0.016	0.019	0.20	0.18		235	359	32.0	Z40	Qualified	FB	Environmental passivation
9	D2Z224101810701	DX51D+Z	1.20	1250	C	7.130	0.09	0.39	0.016	0.019	0.20	0.18		235	360	32.0	Z40	Qualified	FB	Environmental passivation
10	D2Z224101810503	DX51D+Z	1.20	1250	C	7.080	0.09	0.39	0.013	0.015	0.20	0.18		230	350	32.0	Z40	Qualified	FB	Environmental passivation
TOTAL						71.350														
REMARKS	1、 Effective with quality prove seal.																			
	2、 We certify that product have been produced and inspected according standard and agreement.																			QUALITY PROVE SEAL

Designer Deck Inc.
101 PLANCHET RD. UNIT #6-7
CONCORD, ON. L4K 2C6

Porsets1/ Elevated Porcelain Tile Support System [Product Data Sheet]

Updated: Feb 26/2026

System Specifications

System Dimensions (Assembled Frame with Porcelain tile)

H: 1.5 – 1.68″ (micro adjustability) x **W:** 23.75″ x **L:** 23.75″

System Weight by Components (per sq.ft):

- Structural Support Frame: 1.17 **lbs.** / 0.53 **kg.**
- Porcelain tile: 4.31 **lbs.** / 1.95 **kg.**

System Weight Fully Assembled (per sq.ft):

21.9 **lbs.** / 6.27 **kg.**

Note: Weight may vary depending on Porcelain tile of choice

Maximum Static Load (per sq.ft):

100 **lbs.** / 56.7 **kg.**

Tile Specifications

Porcelain Finished Surface tile

Dimensions (Suggested tile size formats)

H: 3/8″ x **W:** (24″) or (12″) or (8″) or (6″) x **L:** (24″) or (48″) or (36″)

Designer Deck Inc.
101 PLANCHET RD. UNIT #6-7
CONCORD, ON. L4K 2C6

Porsets1/ Elevated Porcelain Tile Support System [Product Data Sheet]

Updated: Feb 26/2026

Sustainability & Environmental

Exterior porcelain tiles are considered an excellent option for the environment and sustainability. Here's a breakdown of several key factors which substantiate the materials used in building projects and of why they're eco-friendly:

🌱 1. Durability = Less Waste

Exterior rated porcelain tiles are *extremely durable*–resistant to moisture, heat, frost, and heavy foot traffic. This means:

- Long lifespan ⟶ Fewer replacements over time.
- Less material waste ⟶ Reduced environmental impact from production, transport, and disposal.

🔄 2. Made from Natural, Abundant Materials

Most porcelain tiles are made from:

- Clay, sand, and feldspar– these are natural and abundant raw materials.
- Some tile manufacturers also incorporate recycled content into their tiles (e.g., post-industrial ceramics or glass). This helps reduce waste and makes porcelain tiles a more sustainable option.

☀️ 3. Energy Efficient for Outdoor Use

Porcelain tiles often have a high Solar Reflectance Index (SRI), which means they reflect more sunlight and absorb less heat. Benefits include:

- Reduced urban heat island effect (especially important in city planning).
- Lower cooling needs for adjacent buildings and surfaces.

💧 4. Low Maintenance & No Harsh Chemicals

Porcelain doesn't require sealing or strong chemical cleaners.

- Easier to clean with water or mild soap.
- Reduces chemical runoff into the soil or waterways.

♻️ 5. Recyclability & Sustainable Manufacturing

- At end of life, many porcelain tiles can be crushed and reused as road base or other construction fill.
- Leading manufacturers follow green building certifications (e.g., LEED, BREEAM, and Energy Star).
- Some manufacturers use closed-loop water systems and recycle waste materials during production.

Designer Deck Inc.
101 PLANCHET RD. UNIT #6-7
CONCORD, ON. L4K 2C6

🏡 6. Great for Green Building Projects

Porcelain tiles can contribute to LEED points (Leadership in Energy and Environmental Design) as well as other certifications programs that offer frameworks for assessing and improving building sustainability, specifically in categories such as:

- Sustainable materials
- Regional sourcing
- Energy efficiency
- Recyclability
- Innovation
- Materials and Resources